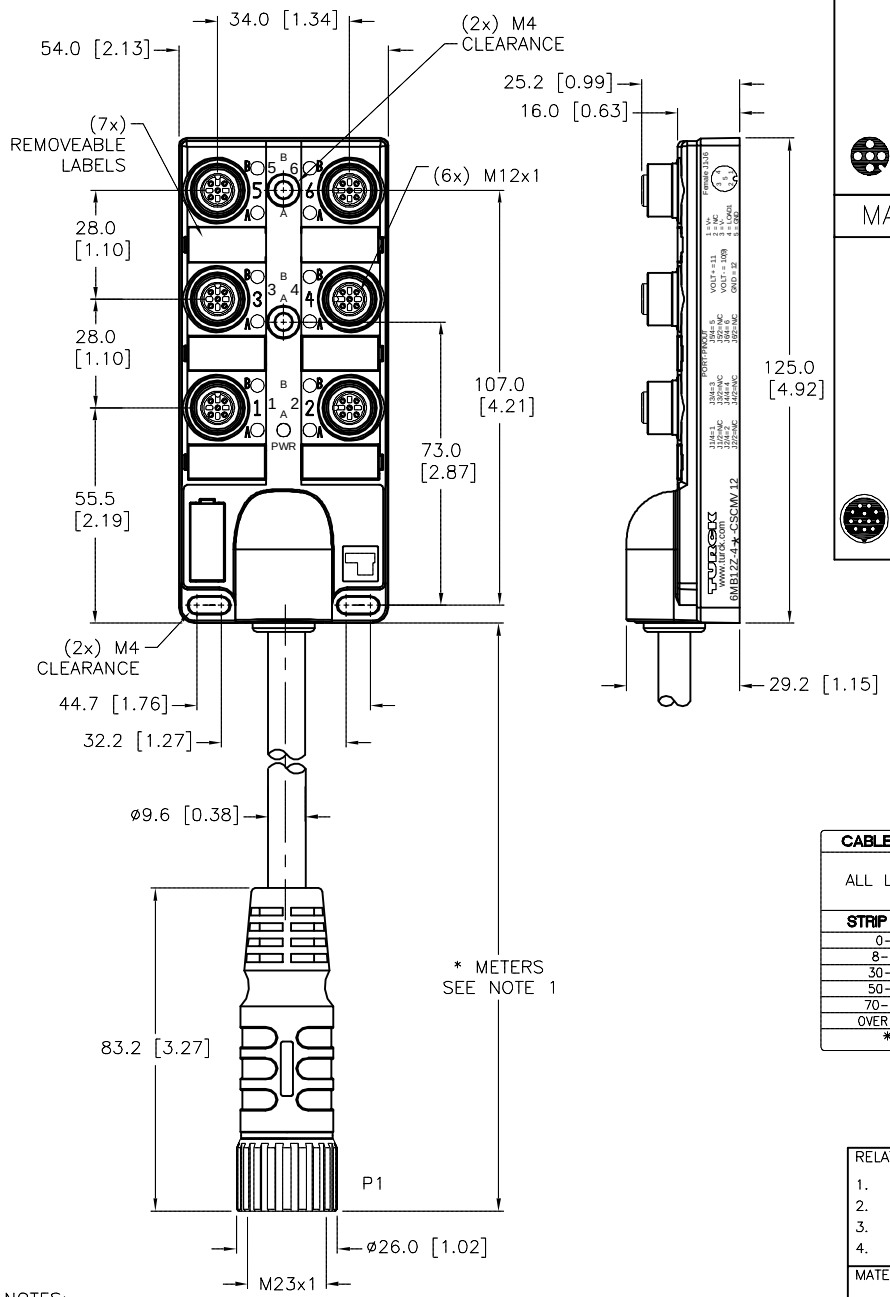

FEMALE END VIEW (J1–J6)

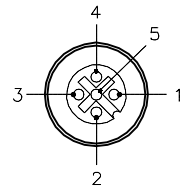

euro fast.

MALE END VIEW (P1)

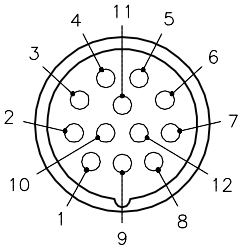

M23 connector

SPECIFICATIONS

NUMBER OF CONDUCTORS [AWG]	9x18 AWG
DRAIN/SHIELD	20 AWG/ALUMINUM–POLYESTER FOIL
CONDUCTOR INSULATION MATERIAL	PVC
OUTER JACKET MATERIAL/COLOR	PVC/YELLOW
HOUSING MATERIAL/COLOR	NYLON/BLACK
RECEPTACLE MATERIAL/PLATING	BRASS/NICKEL (J1–J6)
CONTACT CARRIER MATERIAL	NYLON
MOLDED HEAD MATERIAL/COLOR	TPU/BLACK (P1)
COUPLING NUT MATERIAL/FINISH	STAINLESS STEEL/PASSIVATED (P1)
CONTACT MATERIAL/PLATING	BRASS/GOLD
O–RING MATERIAL	FKM/FPM (J1–J6)
OPERATING VOLTAGE [V]	250 VDC
OPERATING CURRENT [A]	4.0 AMPS/SIGNAL, 9.0 AMPS TOTAL
PROTECTION CLASS	IP67, ONLY WHEN ALL RECEPTACLES ARE COVERED WITH PLUGS OR CONNECTED
OPERATING TEMPERATURE	–40°C to +85°C (–40°F to +185°F)

WIRING DIAGRAM

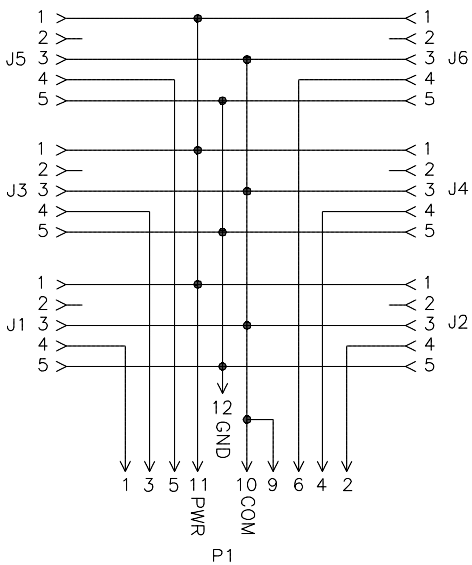

CABLE LENGTH	TOLERANCE *
ALL LENGTHS	+ 4% (OR 50mm) OF LENGTH – 0% (OR 0mm) OF LENGTH WHICHEVER IS GREATER
STRIP LENGTH	**TOLERANCE ***
0–7mm	±0.5mm
8–29mm	±1.0mm
30–49mm	±2.0mm
50–69mm	±3.0mm
70–100mm	±4.0mm
OVER 100mm	±5.0mm
* UNLESS OTHERWISE SPECIFIED	

SOURCE DRAWING - FOR REFERENCE ONLY

NOTES:

1. "*" INDICATES CABLE LENGTHS IN METERS. CONTACT TURCK TO ORDER SPECIFIC LENGTH.

REV	DESCRIPTION	BY	DATE	ECO NO.
C	UPDATE VOLTAGE AND CURRENT RATINGS	RDS	09/13/17	57053

RELATED DOCUMENTS
1.
2.
3.
4.

3RD ANGLE PROJECTION

THIS DRAWING IS CONFIDENTIAL AND THE PROPERTY OF TURCK INC. USE OF THIS DOCUMENT WITHOUT WRITTEN PERMISSION IS PROHIBITED.

TURCK

3000 CAMPUS DRIVE
MINNEAPOLIS, MN 55441
1–800–544–7769
(763) 553–7300
(763) 553–0708 fax
www.turck.us

MATERIAL: SEE SPECIFICATIONS

FINISH: SEE SPECIFICATIONS

ALL DIMENSIONS DISPLAYED ON THIS DRAWING ARE FOR REFERENCE ONLY

CONTACT TURCK FOR MORE INFORMATION

DRFT: KMY | DATE: 01/10/14
APVD: J.S. | SCALE: 1=2.0

UNIT OF MEASUREMENT
MILLIMETER [INCH]

DO NOT SCALE THIS DRAWING

DESCRIPTION: 6MB12Z–4–*–CSCMV 12

IDENTIFICATION NO.

REV: C

FILE: 777032861 | SHEET 1 OF 1

Approved 09/21/2017, work order #144690 by T.S.